Email: sales@taurusfix.com
Web: taurusfix.com

ISO 7045 Phillips Pan Head Machine Screw

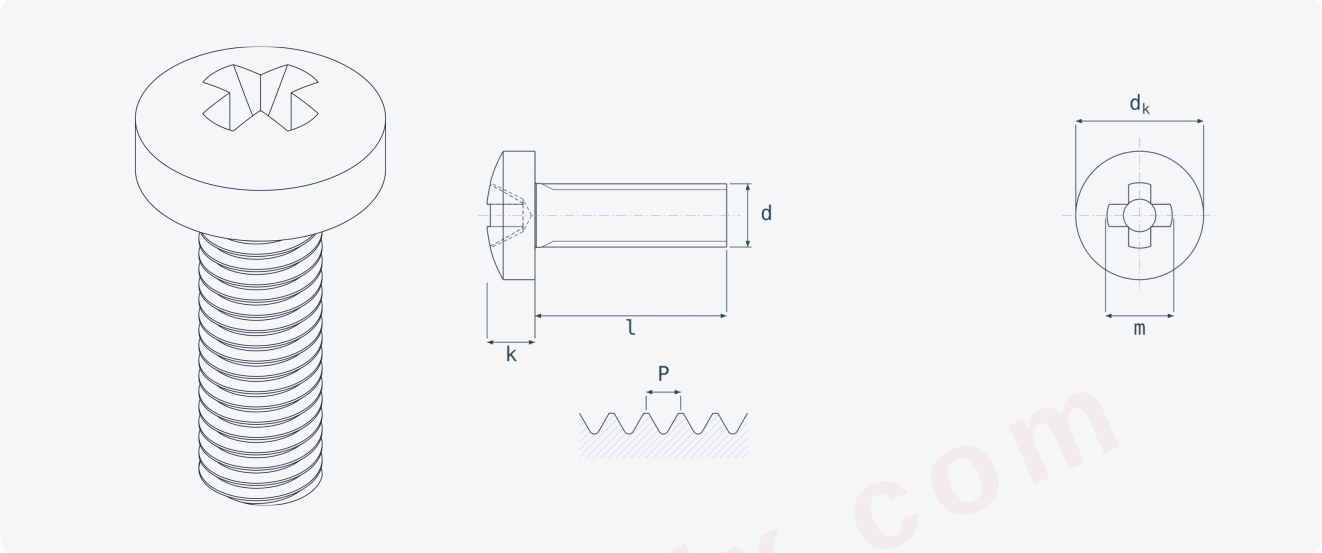

taurusfix.com

STANDARD
ISO 7045 Cross Recessed Pan Head Screw

THREAD
ISO metric coarse pitch

SIZES
M1.6 - M10 · lengths 6 – 300 mm

MATERIAL
Stainless Steel, Carbon Steel

PROPERTY CLASS
A2-70, A4-80 (ISO 3506-1) · 4.8, 8.8 (ISO 898-1)

SURFACE
Passivated, Plain, Zinc Plated, Nickel Plated, Phosphate, Blackened

> Dimensions follow the standard named on this sheet. Material properties and batch test results come with the order's certificate or test report.

BASIS OF SPECIFICATION

DIMENSIONS	CARBON STEEL / ALLOY STEEL	STAINLESS STEEL	PRODUCT GRADE
ISO 7045:2011	ISO 898-1:2013	ISO 3506-1:2020	A

Email: sales@taurusfix.com
Web: taurusfix.com

DIMENSIONS

mm · ISO 7045

d	P	dk	k nom.
M1.6	0.35	3.2	1.3
M2	0.4	4	1.6
M2.5	0.45	5	2.1
M3	0.5	5.6	2.4
M3.5	0.6	7	2.6
M4	0.7	8	3.1
M5	0.8	9.5	3.7
M6	1	12	4.6
M8	1.25	16	6
M10	1.5	20	7.5

P thread pitch **dk** head diameter **k** nominal head height

taurusfix.com

MECHANICAL PROPERTIES

ISO 3506-1

Class	Rm min.	Yield requirement	Elongation requirement	Hardness
A2-70	700 MPa	Rp0.2 min. 450 MPa	0,4d mm	–
A4-80	800 MPa	Rp0.2 min. 600 MPa	0,3d mm	–

MECHANICAL PROPERTIES

ISO 898-1

Class	Rm min.	Yield requirement	Elongation requirement	Hardness
4.8	420 MPa	Rpf min. 340 MPa (not a test value)	Af min. 0.24	130 - 220 HV
8.8 up to M16	800 MPa	Rp0.2 min. 640 MPa	A min. 12 %	250 - 320 HV

MARKING

Steel (not usual - marked only if the purchaser requires it): If the purchaser requires marking, the system of 10.3 applies: manufacturer identification mark and property class symbol. Position: Where the head shape allows it. Sizes: All sizes. Clause: ISO 898-1:2013, 10.3.3.5 Other types of bolts and screws. "Marking is not usual for screws with flat countersunk head, oval countersunk head, cheese head, pan head or similar head shapes that are slotted, cross-recessed, or with socket or other internal driving feature."

Stainless steel (required): Steel group and property class, plus the manufacturer identification mark. Position: Preferably on the head, where it is possible to do so. This product is neither a hexagon head (10.3.1) nor a socket head (10.3.2), so this general clause is the one that applies. Sizes: All sizes. Clause: ISO 3506-1:2020, 10.3.3 Other types of bolts and screws. "Other types of bolts and screws shall be marked in the same way where it is possible to do so, and preferably on the head."

Cross-recessed pan head screw. This head shape falls under the not usual sentence of ISO 898-1 10.3.3.5, so steel parts normally carry no marking. This is a checked negative on both the product standard and the material standard, not a gap in our records.

Email: sales@taurusfix.com
Web: taurusfix.com

DOCUMENTS

EN 10204 3.1 material certificate, dimensional inspection report and mechanical test report, on request.

taurusfix.com